ROHS

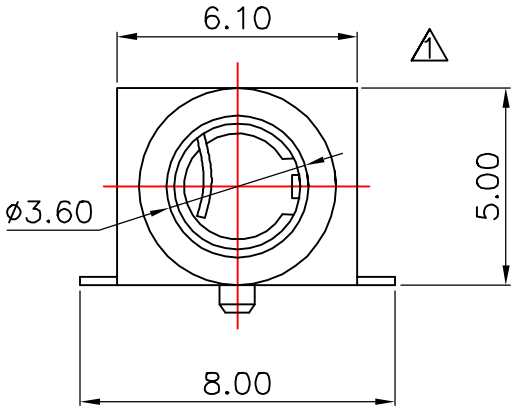

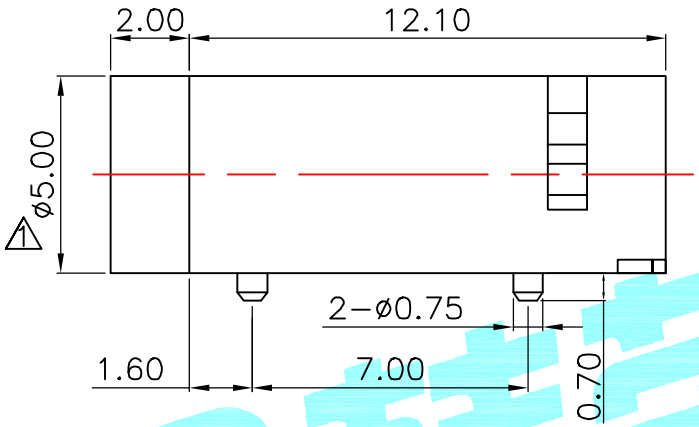

P.C.B Layout (TOP view)

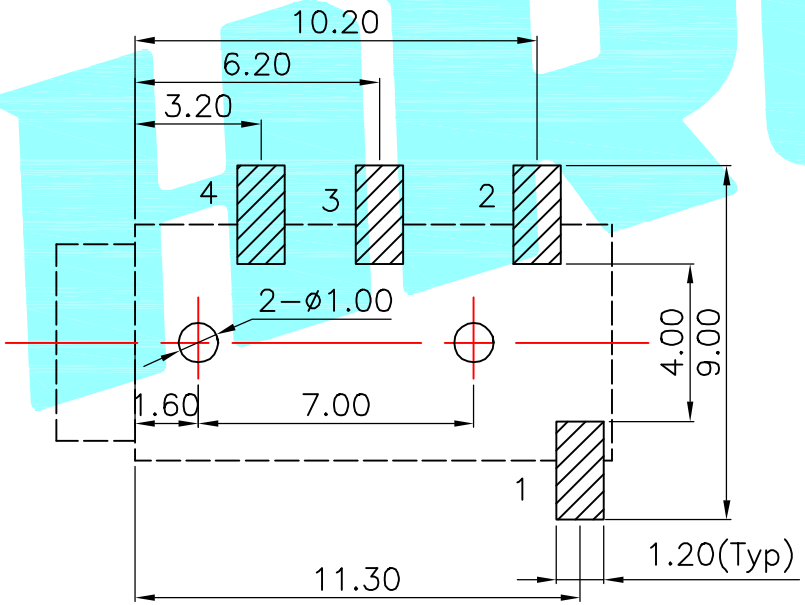

	PJ−320D−A	PJ−320D−B
Schematic	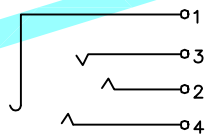	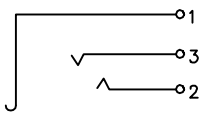

Rating:0.5A 30V DC
Contact Resistance:100 mΩ Max.
Operating temperature:−20℃~70℃
Operating force:3−20N
Operating Life:5,000cycles

ITEM	PART NAME	TER'NO.	QTY.	MATERIAL	FINISHING	REMARK
②	Terminal	——	4	Phosphor bronze	Au Plating	——
①	Housing	——	1	Nylon	Black	——

APPROVALS		DATE
DRAWN	J.X.Zhang	2016/5/3
CHECKED		
APPROVALS		

HRO韩荣® ELECTRONICS CO.,LTD

TITLE: PHONE JACKES
PART NO. PJ−320D
UNIT: mm SCALE: 1:1 PROJ.
DRAWING NO. —— SHEET 1 OF 1

TOLERANCES ARE: 30~以上 ±0.30; 10~30 ±0.20; 5~10 ±0.15; ~5 ±0.10; ANGLE ±2°

ECN NO.	REV.	DATE.	DESCRIPTION.	CHANGE.	CHECK.	APPRO.
——	B	——	⚠	——	——	——
——	A	——	NEW	——	——	——